International Journal of Advances in Electronics Engineering – IJAEE
Volume 4 : Issue 3 [ISSN 2278 – 215X]
Publication Date : 30 September, 2014

Banking Locker System With Odor Identification & Security Question Using Rfid & Gsm Technology

Sanal Malhotra[1]

Abstract- **This paper describes Banking Locker Security system with Odor identification,Security Questions using RFID and GSM technology which can be used in banks, companies and at personal secured places. Only original account holder is able to use his locker. This system uses Odor identificatiom,Security question technique, RFID technology and GSM technology which makes it more secured than any other system. The system is more secured as 4 steps are required for verification. RFID tag is verified using RFID technology, then valid person has to answer the security question using Security question software technique and it should be same as that of stored (initially during account opening),then the valid person gets message in his mobile using GSM technology and has to type password from his mobile and keypad of locker, both passwords should match to open the door of the locker,and then odor identification will be done,the odor pattern should match with the odor pattern stored in the microcontroller.**

Keywords- GSM,Odor Identification, Security Questions, RFID, Keyboard, Locking system, Microcontroller.

I. Introduction

Customers keep their valuable items and money in bank locker, It is very important for every bank that it should provide high security to Locker system .In this paper by using RFID ,Odor identification,Security Question and GSM technology we will provide more security than other systems. RFID is an acronym for Radio Frequency Identification. In general terms, RFID is a means of identifying a person or object using a radio frequency transmission. Odor Identification and Security questions can be used as an extra level of security for customers to verify their identify. We can then prompt them for the answer to the question they select. At the time of registration of account of the customer, they will be asked to choose a security question for which they have to give answer. All the records of security questions of different customers will be stored in microcontroller that will be done by creating appropriate software for security question using C or C++.At the time of entering in locker system, Firstly RFID tag will be verified by the microcontroller, Different customers based on their RFID tag and previous information stored in microprocessor will be asked to choose security question ,if they will give the right answer, than GSM technology will be used to send SMS to the customers mobile number. The customer will enter the password using keypad and mobile. If the password is matched. The door will be opened otherwise the door will remain closed.After these verifications odor identification technique is used in which the odor of ther person is matched with the odor patterns initially stored in the microcontroller.This system is more secure than other systems because four steps are required for verification.

II. Related Works

In this section some related works are – (a) To increase the security of the customers in ATM machine using security Questions and GSM technology, by this more security will be provided to ATM users so that if their ATM card is stolen and criminal know its password, than also he will not be able to process the transaction (b) This system is used for maestro shopping card, where it provides security to users (c) To increase the security of cash rooms in bank using RFID and GSM technology(d) This system is used to safeguard home items and offer security when the owner is out of the home.(e) This system is used for airport securities using odor identification.

III. Identification of Odor

Every person has his/her own odor.This is used for the identification of person in locker system.When the RFID,Security question,GSM identification is done,then the person has to undergo Odor identification.Initially during account opening the odor patterns of different account holders is stored is the microcontroller.An electronic nose has been designed and is equipped with a software that can detect body odor.An array of metal oxide sensors was used in this system for detecting odor.Different sensors can be used to detect odor including conductivity,Piezoelectric,Metal-oxide-silicon field effect transistor(MOSFET),optical Fiber,and spectrometry based sensors.It uses principle component analysis(PCA) algorithm implemented for pattern recognition and classification.It is connected to the microcontroller where it checks wheather the odor is of authenticated person or not.If the odor matches with the

pattern initially stored in the microcontroller,the locker gate is opened otherwise it remains in closed position.This technique of identification of odor by electronic nose provides an extra level of security in locker system for bank users.

IV. Security Question System

Security questions can be used as an extra level of security for customers to verify their identify. You can then prompt them for the answer to the question they select. At the time of registration of the customer they will be asked to choose a security question for which they have to give answer. All the records of security questions of different customers will be stored in microcontroller that will be done by creating appropriate software for security question using C or C++.At the time of entering in locker system, different customers based on their RFID tag and previous information stored in microprocessor will be asked to choose security question, if they will give the right answer, than GSM technology will be used to send SMS alert password to the customers mobile number. The customer will enter the password using keypad and if the password is matched then the customer will undergo odor identification,if the pattern matches,the door will be opened else the door will remain closed.

V. Working Principle

This system consists of microcontroller , Security Questions Software, RFID reader , GSM modem ,electronic nose,keyboard and LCD.The RFID reader reads the ID number from passive tag and sends it to the microcontroller where it checks whether it is of valid person or not (from stored data in memory of microcontroller) .If the ID number is valid, then microcontroller ask the Security question(different for different users) from users and it checks whether it is correct or not(from stored data), If the answer is correct then microcontroller sends the SMS request to the authenticated person's mobile through GSM, for getting original password to open the bank locker. When the person sends the password to the microcontroller, it will verify the passwords entered by the keyboard (by person present in front of locker) and received from authenticated person's mobile phone. If these two passwords are matched then odor verification will be done through electronic nose where it checks the odor pattern stored in microcontroller.If both the patterns are matched locker will be opened otherwise it will remain in closed position.

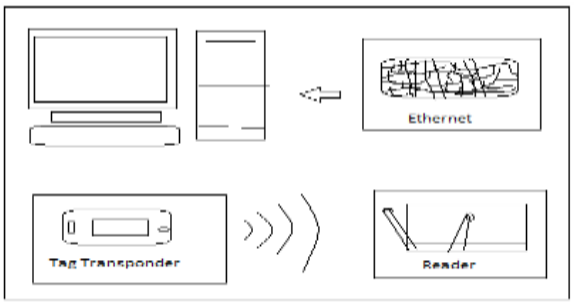

Figure 1. RFID Reader

VI. Flow Chart

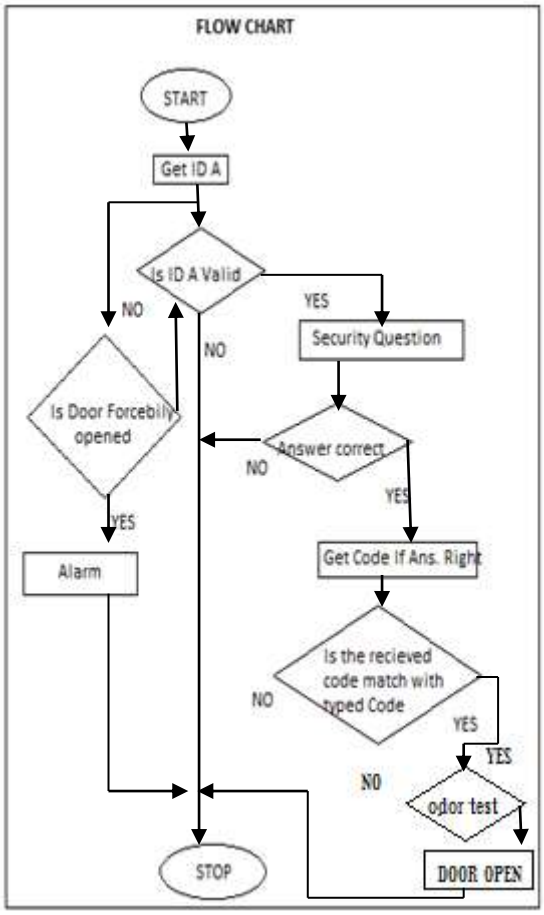

Figure 2. Locker Security System Based On RFID,GSM, Security Questions & Odor Identification

The Flow chart of Banking Locker system based on RFID,Odor identification, Security questions and the GSM technology is shown in the figure **2**. According to which the system will first get ID A and microcontroller will check whether the ID A is valid or not, If ID A is valid, the system will ask a security question, if the answer of the security question is correct, then system will ask password code, if the typed and the received code matches then the odor identification will be done,if the odor matches with the pattern stored in

microcontroller then the doors of the Locker opens otherwise they remain closed.

VII. Block Diagram

The block diagram of Banking Locker system based on RFID, electronic nose,Security Questions and the GSM technology is shown in the figure **3**. It consist of power supply section, keyboard, Security Question, RFID Reader, AT9C51 microcontroller, MAX232, relay & driver unit, GSM modem, LCD Display and DC motor.Electronic nose is used for odor identification. RFID reader reads the data given to MCU AT9C51, Keypad is used to enter the code and to answer the security question, LCD display displays the entered password or answer of security question, GSM is used to send SMS to mobile phone of the customers.

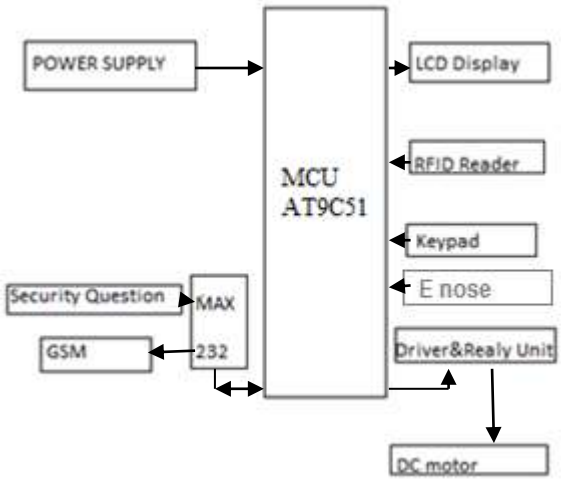

Figure 3. Block Diagram of Locker Security System

Conclusion

A banking locker security system with Odor identification, Security Questions, using RFID technology, PASSWORD and GSM is implemented. It is more secured system which is cost effective. The microcontroller compares answer of the security question and entered at the time of account opening. It also compares the passwords entered by keyboard and received through mobile phone. If these passwords matches the microcontroller gives signal to open the locker.

Acknowledgment

The author would like to thank GOD first, for making him capable, for writing this paper.I like to thank all the people who remained a great source of help and inspirations in this project. The author would like to thank Amity University for providing necessary facilities to carry out this work.

References

[1]. Malik Sikandar Hayat Khiyal, Aihab Khan, and Erum Shehzadi. " SMS Based Wireless Home Appliance Control System (HACS) for Automating Appliances and Security", Issues in Informing Science and Information Technology. Vol. 9. pp. 887 – 894. 2009.

[2]. Jin Z., Shimbo T., Hosoe Y., Oyabu T. Breath Odor Characteristics after Drinking and Identification of Sake Quantity. Sens. Actuat. B. 2005;108:265–270.

[3]. Islam, N.S. Wasi-ur-Rahman, M. "An intelligent SMS-based remote Water Metering System". 12th International Conference on Computers and Information Technology, 2009, 21-23 Dec. 2009, Dhaka, Bangladesh. International Conference on Robotics, Vision, Information and Signal Processing 2007 (ROVISP2007), Penang, 28 – 30 November 2007.

[4]. Natale C.D., Macagnano A., Paolesse R., Tarizzo E., Mantini A., D'Amico A. Human Skin Odor Analysis by Means of an Electronic Nose. Sens. Actuat. B. 2000;65:216–219

[5]. V.Ramya1, B. Palaniappan, V.Sumathi, "Gsm Based Embedded System For Remote Laboratory Safety Monitoring And Alerting", International Journal of Distributed and Parallel Systems (IJDPS) Vol.3, No.6, November 2012.

[6]. Kim K.H., Park S.Y. A Comparative Analysis of Malodor Samples between Direct (Olfactometry) and Indirect (Instrumental) Methods. Atmos. Environ. 2008;42:5061–5070

[7]. Vinaixa M., Vergara A., Duran C., Llobet E., Badia C., Brezmes J., Vilanova X., Correig X. Fast Detection of Rancidity in Potato Crisps Using E-noses Based on Mass Spectrometry or Gas Sensors. Sens. Actuat. B. 2005;106:67–75.

[8]. Xu X., Tian F., Yang S.X., Li Q., Yan J., Ma J. A Solid Trap and Thermal Desorption System with Application to a Medical Electronic Nose. Sensors. 2008;8:6885–6898.

[9]. Kutsu T., Sekiguchi K., Ohmori T., Sakurada K. Individual Comparisons of the Levels of (E)-3-Methyl-2-Hexenoic Acid, an Axillary Odor–Related Compound, in Japanese. Chem. Senses. 2006;31:557–563.

[10]. Leyden J.J., McGinley K.J., Hölzle E., Labows J.N., Kligman A.M. The Microbiology of the Human Axilla and Its Relationship to Axillary Odor. J. Invest. Dermatol. 1981;77:413–416.

[11]. Curran A.M., Rabin S.I., Prada P.A., Furton K.G. Comparison of the Volatile Organic Compounds Present in Human Odor Using Spme-GC/MS. J. Chem. Ecol. 2005;31:1607–1619.

[12]. Penn D.J., Oberzaucher E., Grammer K., Fischer G., Soini H.A., Wiesler D., Novotny M.V., Dixon S.J., Xu Y., Brereton R.G. Individual and Gender Fingerprints in Human Body Odour. J. R. Soc. Interf. 2007;4:331–340.

[13]. Pearce T.C., Schiffman S.S., Nagle H.T., Gardner J.W. Handbook of Machine Olfaction, Electronic Nose Technology. Wiley-VCH; Weinheim, Germany: 2002.

[14]. Delac K., Grgic M. A Survey of Biometric Recognition Methods. 46th International Symposium Electronics in Marine. ELMAR-2004; Zadar, Croatia. June 16–18, 2004; pp. 184–193.

[15]. Kumar Chaturvedula, " RFID Based Embedded System for Vehicle Tracking and Prevention of Road Accidents" International Journal of Engineering Research & Technology (IJERT), Vol. 1 Issue 6, August – 2012

ABOUT AUTHOR

SANAL MALHOTRA

Department of Electronics & Communication Engineering, Amity University, Noida, Uttar Pradesh, India

The author is a pre final year student of B-Tech electronics and communication engineering of Amity University,Noida, Uttar Pradesh,India